NOTES:

1. MATERIAL: ALUMINUM HEATSINK EXTRUSION STOCK
2. ASSOCIATED CAD FILE:
3. BREAK SHARP EDGES
4. QUANTITY NOTED IN RFQ

REVISION HISTORY				
ZONE	REV	DESCRIPTION	DATE	APPROVED
	0	INITIAL RELEASE	12/13/2020	J. HAUPT

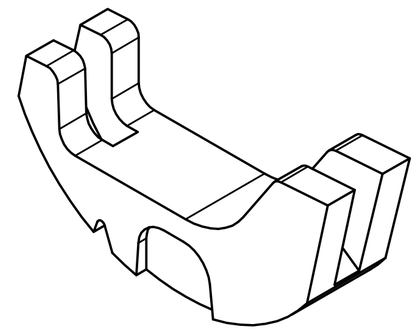

SECTION B-B

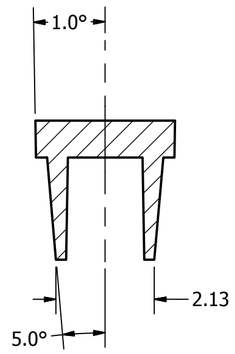

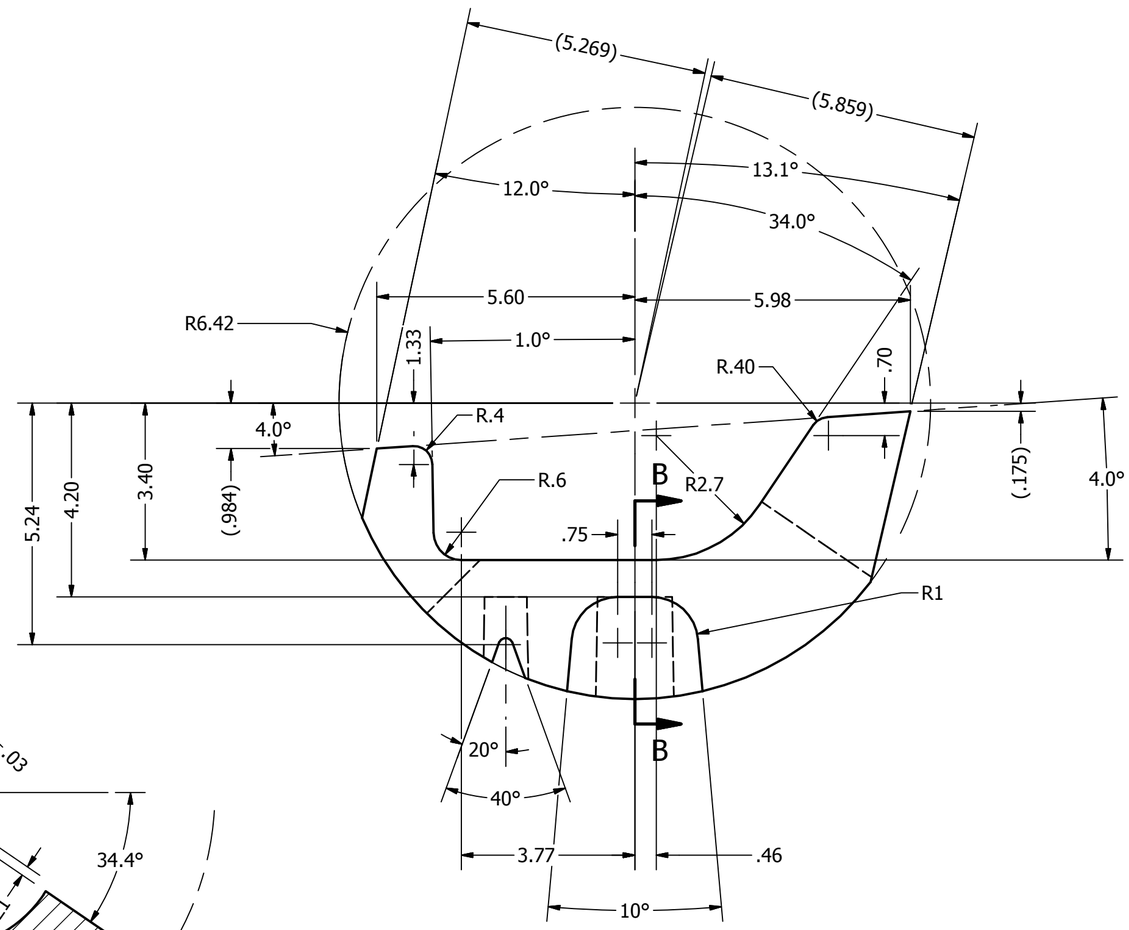

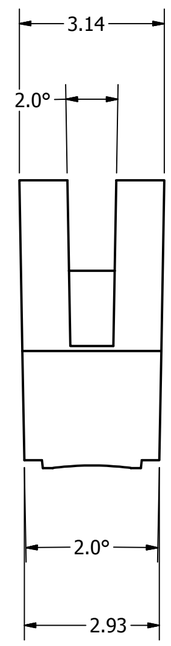

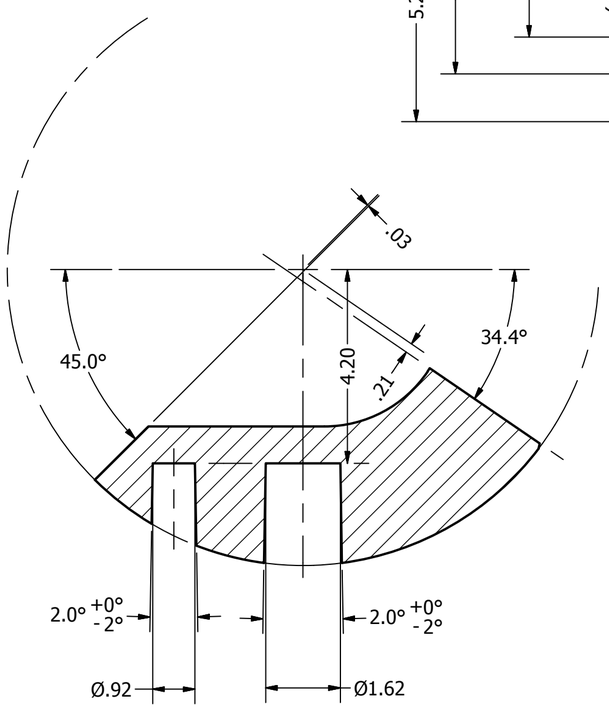

SECTION A-A

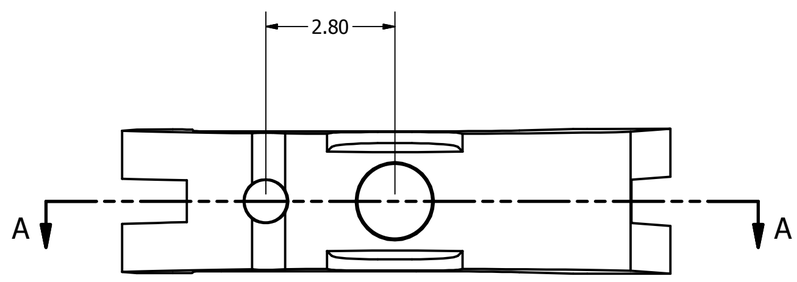

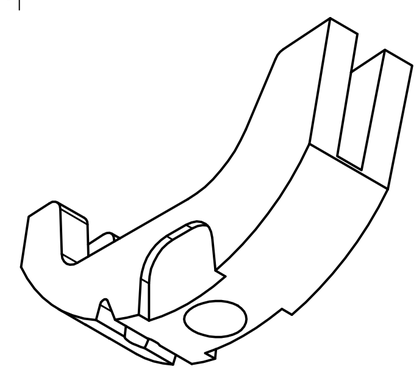

ENGINEER	
Justine Haupt	2/20/2021

ALL UNITS IN MM
DECIMAL TOLERANCES:

X = ±.50
X.X = ±.30
X.XX = ±.16
X.XXX = ±.08

ALL SURFACES Ra µm .8
UNLESS OTHERWISE NOTED

SKY'S EDGE
www.skysedge.us
(631) 965-3409
justine@skysedge.us

GOVERNOR WEIGHT

SIZE	PROJECT	DWG NO	REV
C		GovernorWeight	0